#	DESCRIPTION	DATE	APPROVED
A	INITIAL RELEASE	2/15/01	GWB
	SPECIFICATION CONTROL DRAWING		

NOTES (UNLESS SPECIFIED):
1. ALL DIMENSIONS IN INCHES
2. DO NOT EXCEED RECOMMENDED LOADING SPECIFICATIONS
3. DO NOT CUT, DRILL OR MODIFY ANY PORTION OF THIS BEARING
4. REFER TO MANUAL FOR MOUNTING LOCATION REQUIREMENTS

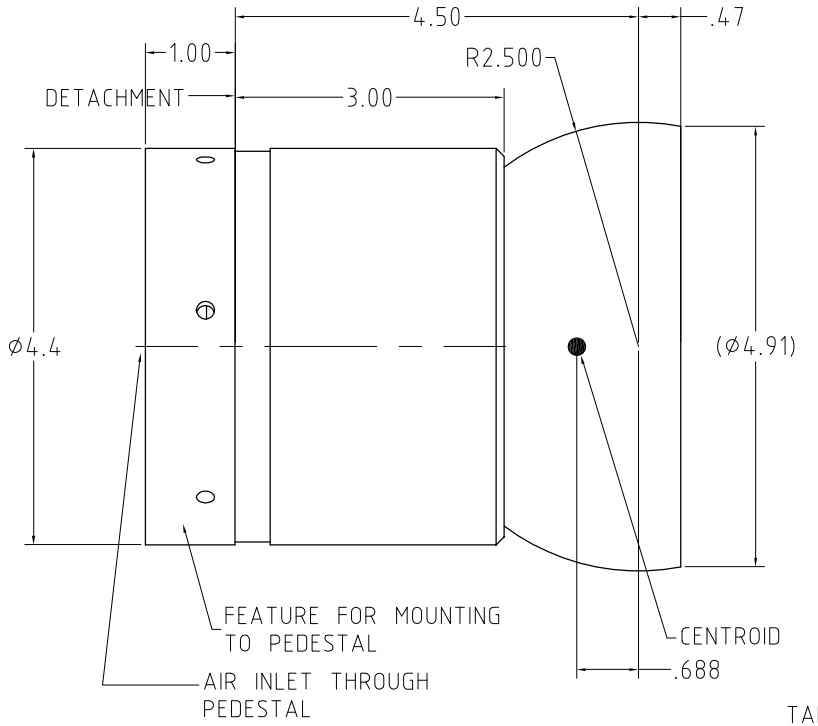

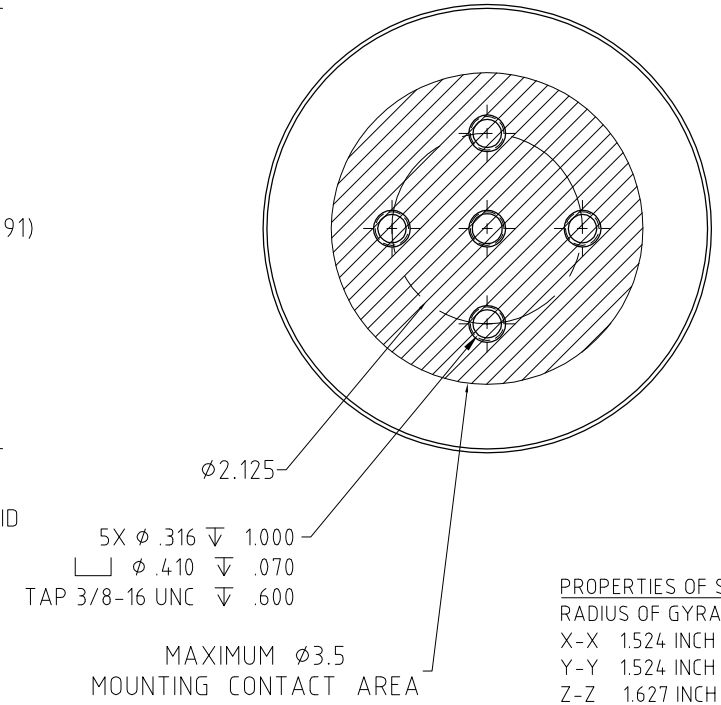

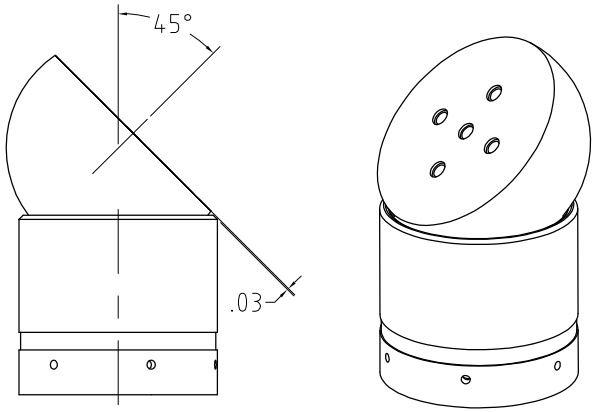

45 DEGREE POSITION

PROPERTIES OF SPHERE

RADIUS OF GYRATION ABOUT CENTROIDAL AXES

X-X 1.524 INCH

Y-Y 1.524 INCH

Z-Z 1.627 INCH

MOMENTS OF INTERTIA ABOUT CENTROIDAL AXES

LX 9.413 lbm-in^2

LY 9.413 lbm-in^2

LZ 10.729 lbm-in^2

MASS

4.05 lbm

MATERIAL: ALUMINUM		NAME	DATE
		DRAWN AR	2/4/01
		CHECKED JH	2/10/01
FINISH: HARDCOAT		APPROVED MH	2/15/01
PART NUMBER			
TOLERANCES (UNLESS OTHERWISE SPECIFIED) DECIMALS .X ±.015 .XX ±.010 .XXX ±.005	ANGLE DEG ±30'	UNITS INCHES	

THIS DRAWING, INCLUDING ALL SUBJECT MATTER, ENCLOSES CONFIDENTIAL INFORMATION OF SPECIALTY COMPONENTS, INC. AND IS LOANED WITH THE UNDERSTANDING THAT IT SHALL BE RETURNED. IT WILL NOT BE USED FOR ANY PURPOSE EXCEPT THAT FOR WHICH LOANED UNLESS WRITTEN PERMISSION IS GRANTED BY THE OWNER. ANY DUPLICATION OF THIS DOCUMENT IS STRICTLY PROHIBITED.

© specialty components, inc.

SPECIALTY COMPONENTS INC.
20 VILLAGE LANE • MILLSTONE, CT 06498
TEL 860.434.9100 • FAX 860.434.9104
WEB: WWW.SPECIALTYCOMPONENTS.COM
E-MAIL: INFO@SPECIALTYCOMPONENTS.COM

CAGE CODE 1TV41

TITLE ASSY SRA250-R45

SPHERICAL AIR BEARING ASSEMBLY

SIZE	DRAWING NUMBER	REV
C	620-39128	A

SCALE | NUMBER OF SHEETS 1